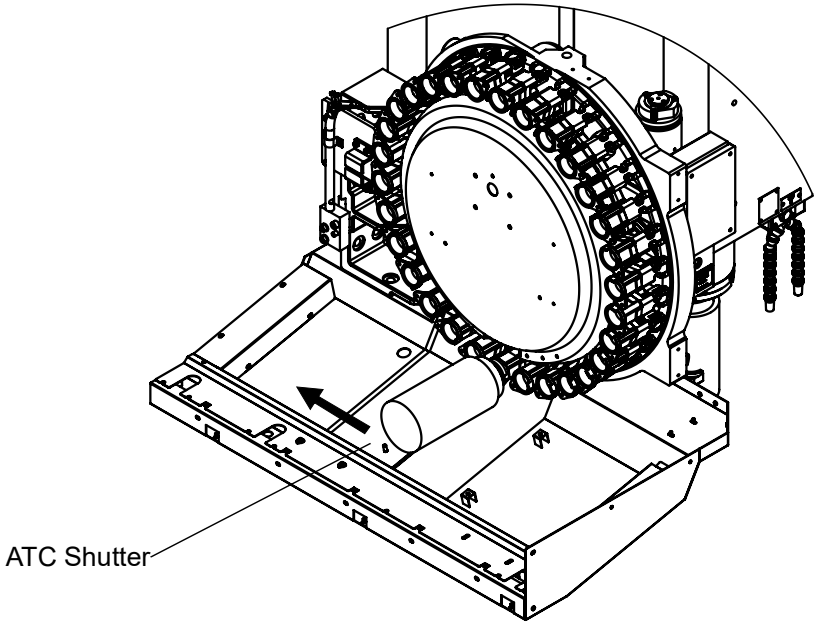

③ ATC shutter opens for tool change.

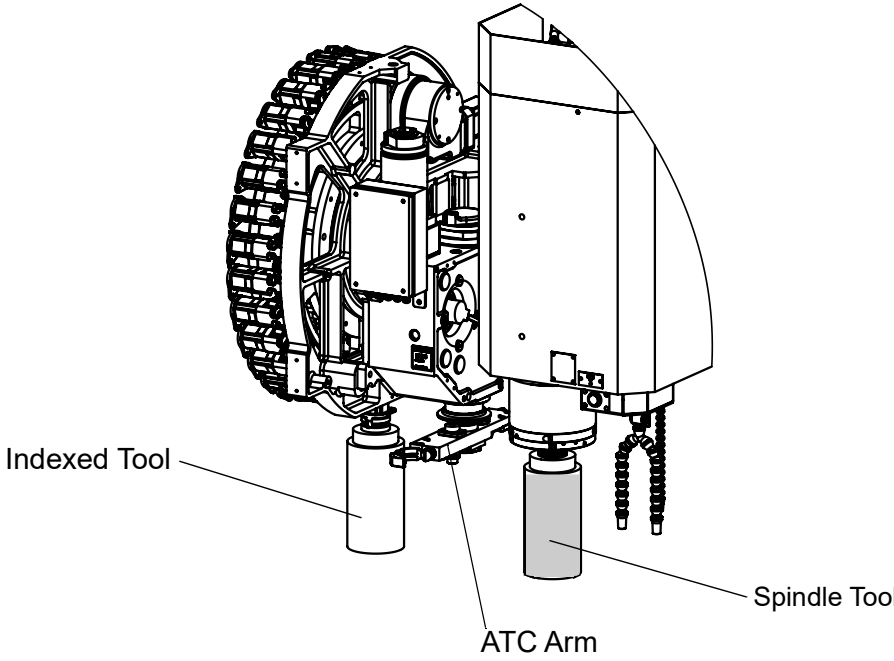

④ ATC pot vertical and ATC arm in standby position.